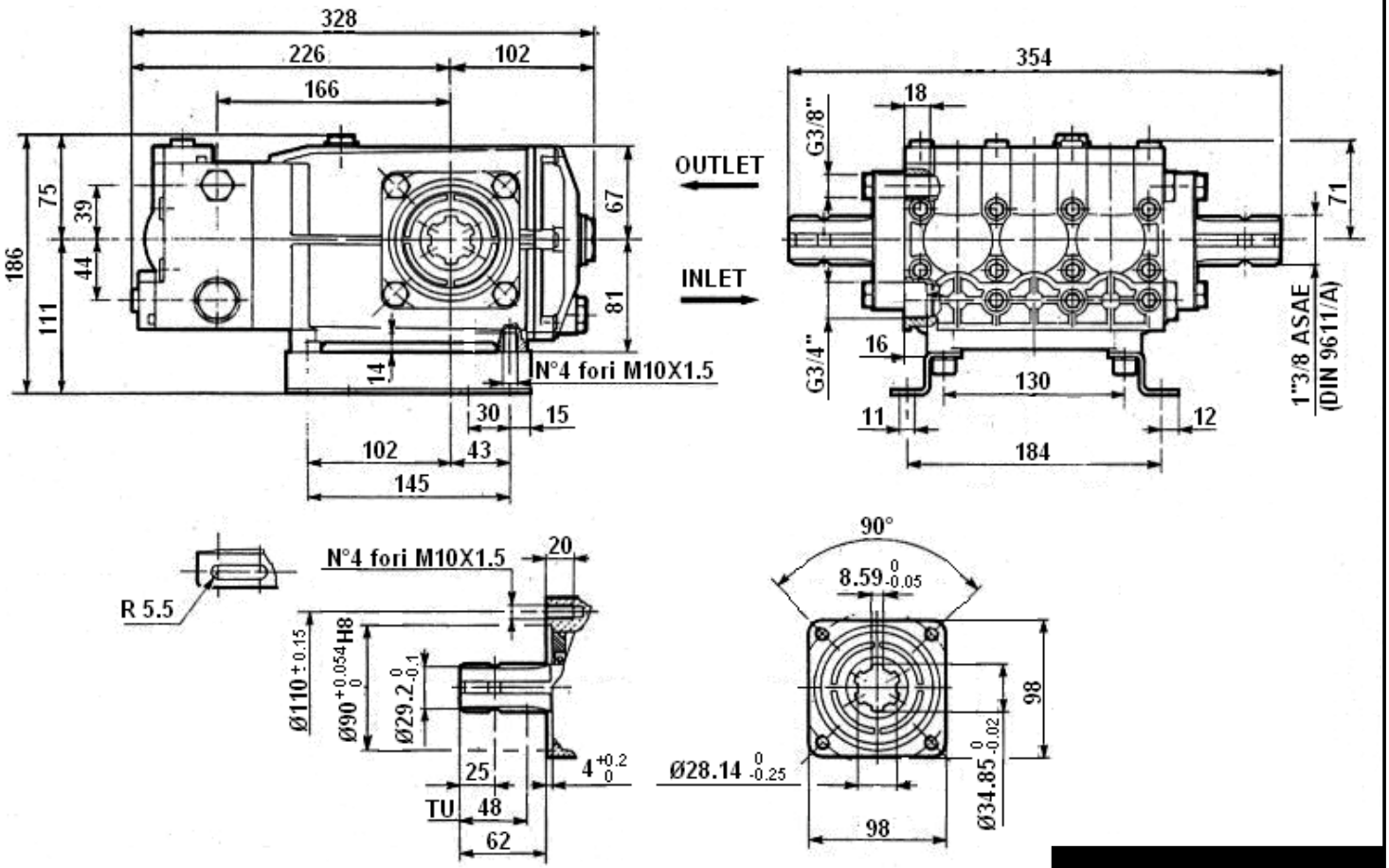

DIS. COD. 69.2141.00

T44 – T55